DIGGERPLANT

P-PLDP-1254-K-N

Bucket Locker Kit, 1.7m Width

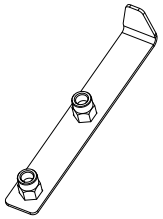

1x
P-PLDP-5052-A-R

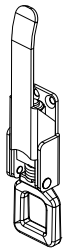

2x
P-HAOC-1550-P-N



2x
P-HABO-3120-P-N

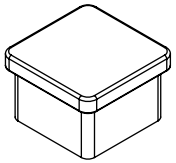

2x
P-HAIN-0530-P-N

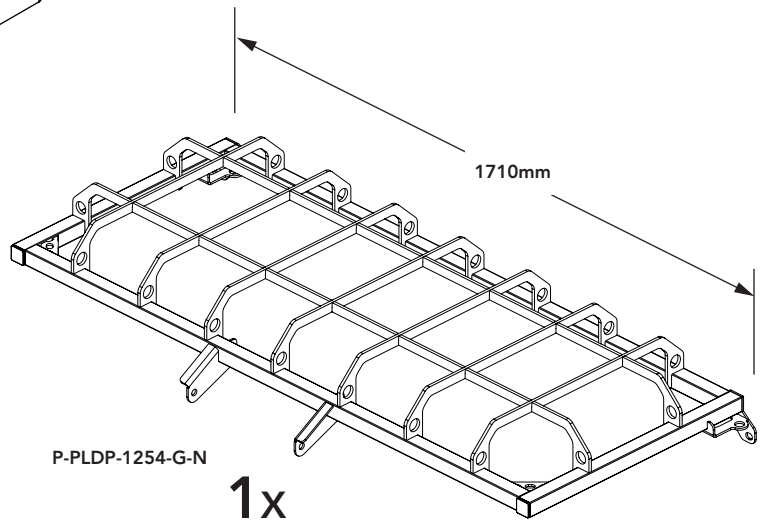

P-PLDP-1254-G-N
1x

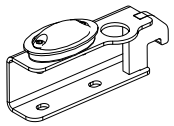

1x
P-PLDP-5052-A-L

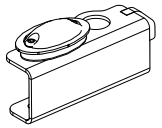

1x
P-PLDP-5052-A-R

FASTENER KIT
P-FTXK-2005-K-N
1x

FASTENER KIT
P-FTXK-0071-K-N
1x

PART NUMBER	DESCRIPTION	QUANTITY
P-FTXK-0071-K-N	Fastener Kit - P-RAMP-9302/9312-K-N - Connect Ramps - Bagged	1
P-FTXK-2005-K-N	Fastener Kit - P-PLDP-1150-K-N, Bucket Locker Kit, OC Latch - Bagged	1
P-HABO-3120-P-N	3.2 mm x 25.4 mm x 75 mm, Latch handle, Flat Sleeve	2
P-HAIN-0530-P-N	Hardware, Plastic - Black, Insert, 40 mm x 40 mm sq (1.00-2.0mm wall)	2
P-HAOC-1550-P-N	Hardware-Over Centre Catch, Toggle Clamp, 217 mm L x 46 mm W x 32 mm	2
P-PLDP-1254-G-N	Digger Plant, Bucket Locker, 1.7m, Assembly, G, OC Latch Version	1
P-PLDP-5052-A-L	PLDP Bucket Cage Catch Assembly , LH	1
P-PLDP-5052-A-R	PLDP Bucket Cage Catch Assembly , RH	1
P-PLDP-5056-A-N	PLDP Bucket Cage Nut Replacement Catch, B	1

KIT ASSEMBLY