TIPPER

P-TIP3-9040-K-N

Ladder Rack Kit to suit 2.00m width without Mesh Kit

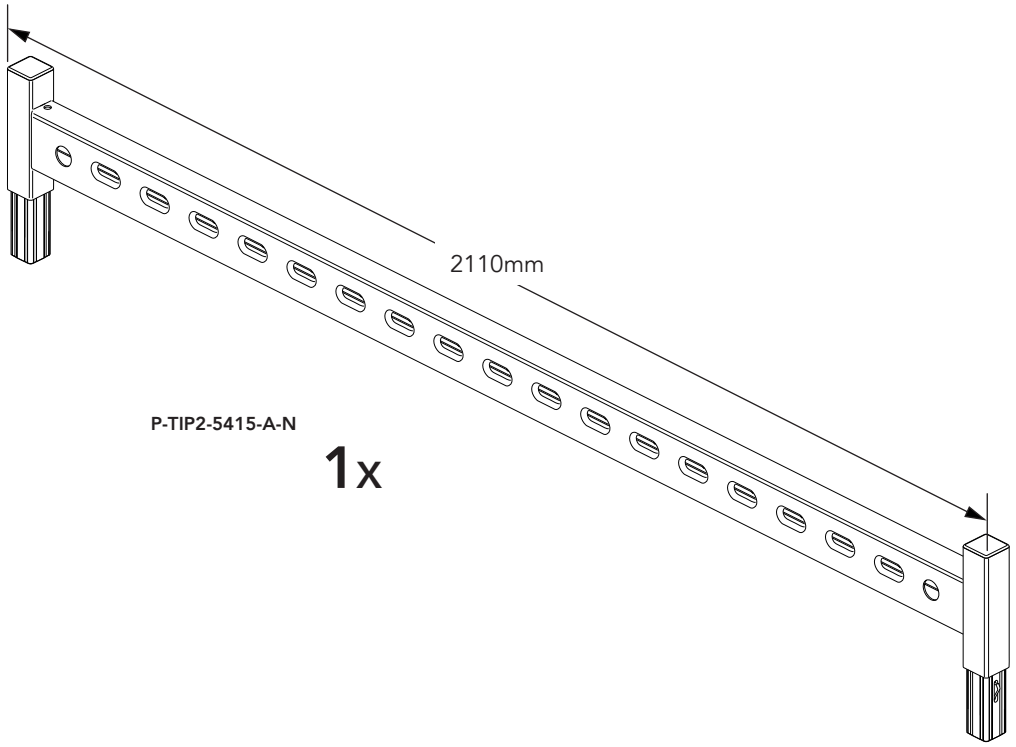

P-TIP2-5415-A-N

1x

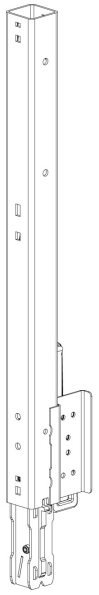

P-SD22-5110-A-R

1x

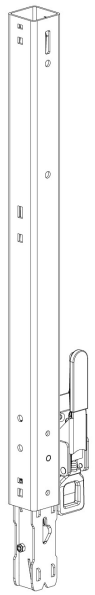

P-SD22-5110-A-L

1x

PART NUMBER	DESCRIPTION	QUANTITY
P-SD22-5110-A-R	Ladder Rack, Click&Clamp, Uni Extension Post Assembly, RH	1
P-SD22-5110-A-L	Ladder Rack, Click&Clamp, Uni Extension Post Assembly, LH	1
P-TIP2-5415-A-N	Tipper2, Ladder Rack Top Bar, 2110mm, Wide, Assembly	1

KIT ASSEMBLY

